ISO 4014 / DIN 931, hexagon head bolt, M 24x380, 8.8, zinc-plated, standard, 5 µm, Zn5/An/T0

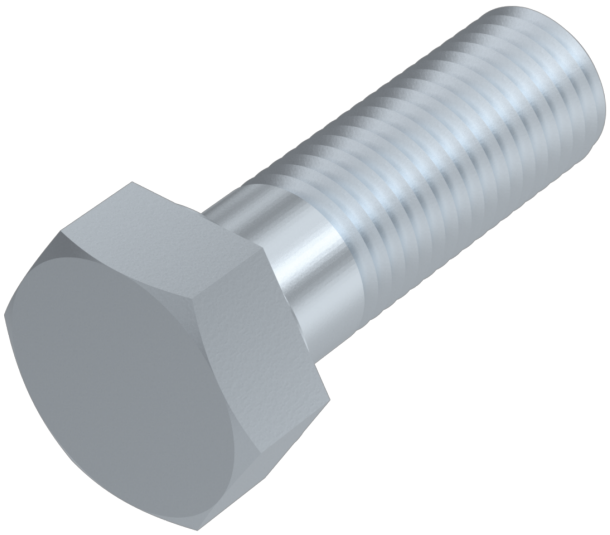

Article number
24093124380

Weight in kg
1.41

Customs number
73181588

Diameter
24 mm

Length
380 mm

Material
Steel

Quality
8.8

Coating
zinc-plated, standard, 5 µm, Zn5/An/T0

Force application
SW 36

Norm
ISO 4014 / DIN 931

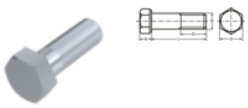

Product details

ISO 4014.

Material	Steel
Total lenght l	380 mm
Length	380 mm
Norm	ISO 4014
Diameter	24 mm
Height of the head k	15 mm
Coating	zinc-plated, standard, 5 µm, Zn5/An/T0
Thread length b	73 mm
Force application type	External hex
Norm	ISO 4014 / DIN 931

Keller & Kalmbach GmbH • Siemensstraße 19 • 85716 Unterschleißheim • + 49 (0) 89 / 83 95 0 • info@keller-kalmbach.com www.keller-kalmbach.de

Quality	8.8
Force application	SW 36
Diameter d	24 mm

Remarks

Changed SW for ISO. M 10, M 12, M 14 and M 22 only available according to DIN 931. For further sizes see ISO 4014.

Application

Universell einsetzbar, vor allem im Maschinenbereich

Product variants

Force application	SW 36
Norm	
ISO 4014 / DIN 931	•

Keller & Kalmbach GmbH • Siemensstraße 19 • 85716 Unterschleißheim • + 49 (0) 89 / 83 95 0 • info@keller-kalmbach.com www.keller-kalmbach.de