DIN 933, hexagon head bolt, M 5x22, 8.8, zinc-plated, standard, 5 µm, Zn5/An/T0

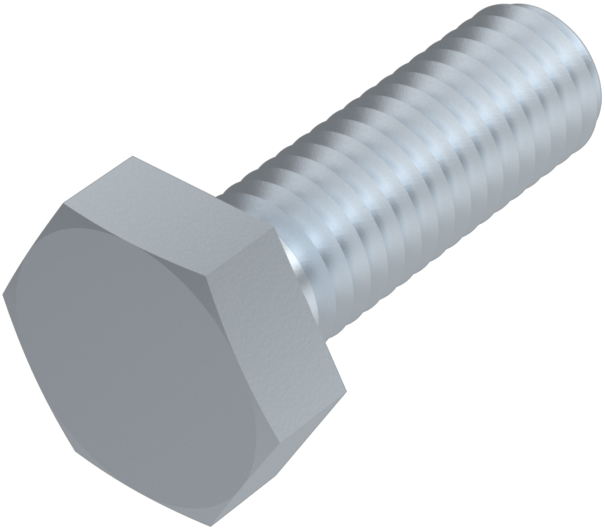

Article number
240933522

Weight in kg
0.004

Customs number
73181588

Material
Steel

Quality
8.8

Coating
zinc-plated, standard, 5 µm, Zn5/An/T0

Diameter
5 mm

Length
22 mm

Force application
SW 8

Norm
ISO 4017 / DIN 933

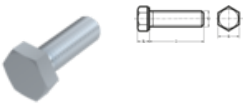

Product details

Threaded close up to the head.

Material	Steel
Force application type	External hex
Length	22 mm
Norm	ISO 4017 / DIN 933
Total lenght l	22 mm
Norm	ISO 4017
Diameter	5 mm
Quality	8.8
Height of the head k	3.5 mm
Force application	SW 8

Keller & Kalmbach GmbH • Siemensstraße 19 • 85716 Unterschleißheim • + 49 (0) 89 / 83 95 0 • info@keller-kalmbach.com www.keller-kalmbach.de

Coating	zinc-plated, standard, 5 µm, Zn5/An/T0
Diameter d	5 mm

Remarks

Standard was withdrawn. DIN similar to ISO 4017. Changed SW for ISO.Sizes M 10, M 12, M 14 and M 22 only available in DIN 933. For further sizes see ISO 4017.

Application

Universell einsetzbar, vor allem im Maschinenbereich

Product variants

Force application	SW 8
Norm	
ISO 4017 / DIN 933	•

Keller & Kalmbach GmbH • Siemensstraße 19 • 85716 Unterschleißheim • + 49 (0) 89 / 83 95 0 • info@keller-kalmbach.com www.keller-kalmbach.de